POPA NEWS
Patent Office Professional Association
September-October 2005 Vol. 05 No. 6

Examiners Need More Time and Professional Treatment, POPA Tells Congress

Capitol Hill decision-makers heard patent examiners' message loud and clear when POPA delivered testimony Sept. 8 stating, "No amount of automation can help an examiner read and understand a patent application and the prior art faster." This is one of the reasons that examiners require a 20 percent increase in the currently allotted examination time per case, according to POPA estimates.

Appearing before the House Judiciary Subcommittee on Courts, the Internet and Intellectual Property, POPA President Ronald Stern underscored the USPTO's continuing need for good tools and a good work environment—in addition to adequate time—to produce a timely, high-quality work product. He called for an end to the agency's current "culture of conflict" to counter the exodus of experienced USPTO examiners.

With pendency being the specter pushing the agency's high-pressure management, Stern noted that more time doesn't inherently translate into greater pendency. "Better searching and examination will increase the certainty of rejection of old or obvious ideas," he said. Thus more time per case will discourage applicants from filing applications of questionable innovative or economic importance and "may actually limit application pendency over time."

[L to R] Rep. Howard Berman (R-Calif.) discusses USPTO activities with POPA President Ronald Stern and USPTO Director Jon Dudas at the Sept. 8 House subcommittee hearing.

Stern cited calculations in a study, published by the National Research Council, that showed that increasing examiners' time per case by one hour would result in a net

(*continued on page 2*)

USPTO Culture Not Healthy, Says NAPA Report

The USPTO logged one workplace disciplinary action for every seven of its employees in 2005—a rate much higher than the federal government average—according to a recent report by the National Academy of Public Administration (NAPA).

The August 2005 report, "U.S. Patent and Trademark Office: Transforming to Meet the Challenges of the 21st Century," noted a steep climb in the number of employee relations actions against employees between 2001 and 2005. While the agency population grew by 313 employees or 5 percent, the number of employee relations actions rose from 546 to 928, an increase of 70 percent over the same time.

The report remarked that the USPTO "is not a healthy organizational culture."

The employee relations actions were mostly performance based and related to "production failure," the report noted. While the patent professionals bargaining unit comprises 58 percent of the USPTO workforce, it received almost 90 percent of the agency's performance-based employee actions (see graph on page 4).

The USPTO tried to explain the dramatic increase by blaming "the liberalization of workday flexibilities." This is the agency euphemistically saying that because employees can flexibly schedule their own work hours, they are cheating on time and that's why production suffers.

(*continued on page 4*)

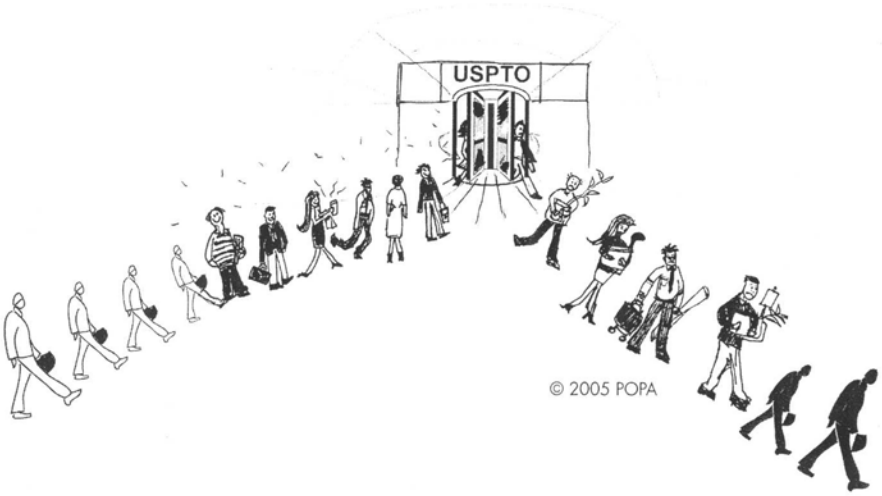

Examiners Need More Time

(continued from page 1)

savings to the country of more than $6 million, with the increased cost of examination offset by greatly reduced private sector litigation expenses.

Also speaking at the hearing, Rep. Howard Berman (R-Calif.) championed examiners' need for more time per case. Since 1976, when the current production system was introduced, the amount of prior art that examiners must search "has exponentially increased," said Berman. "Applications are growing ever more complicated, yet examiners still work under the 1976 assumptions.

"Even with advances in the deployment of information technology, a number of studies have indicated that examiners today simply do not have enough time to do their job properly and have been encouraged to take a number of shortcuts. So the natural result? Quality of patents suffers," Berman said.

Tops in Actions Against Employees

The USPTO's pressure-cooker environment and heavy-handed management style is forcing out or firing a record number of employees, Stern testified. "There is no problem hiring examiners," he said. "The problem is keeping them."

The USPTO may be the "most ruthlessly effective" federal agency in firing employees, Stern said. He cited the National Academy of Public Administration's August 2005 report finding that the USPTO was responsible for almost ten percent of all non-Defense federal employees fired in 2001. The USPTO fired three times more employees in one year than the State Department removed in 17 years.

NAPA also published alarming statistics on the USPTO's aggressive approach to employee relations, showing the agency surpassing the government norm in increased performance-based disciplinary actions against its employees. [For more on the NAPA report, see "USPTO Culture Not Healthy," in this issue.]

Stern described the toll that the USPTO's "quality initiatives" have taken on employee morale and productivity. The recertification of primary examiners, in-process reviews, and second-pair-of-eyes program intended to improve quality instead force examiners to constantly look over their shoulders. While only 60 percent of allegations of error were upheld in the first part of fiscal year 2005, the need to defend themselves against alleged errors continues to sap examiners' morale and fortifies employee bitterness and frustration.

(continued on page 3)

Congress Daily**AM**

JUDICIARY

Labor Leader: PTO Needs More Time To Review Applications

By Molly M. Peterson

A Patent and Trademark Office examiner told a House subcommittee Thursday that his agency could solve many problems within the U.S. patent system by giving its staff more time to review applications and improve patent quality.

"Many proposed solutions represent radical changes to the patent system and go far beyond what is necessary to improve performance" at the PTO, Ronald Stern, president of the Patent Office Professional Association, told the Judiciary Courts, the Internet and Intellectual Property Subcommittee during an oversight hearing.

Likening the PTO to a "legal sweatshop," Stern said the agency places too much emphasis on disciplinary action and not enough emphasis on employee training and mentoring. He said patent examiners also need at least 20 percent more time to review each patent application.

"Rather than a massive overhaul of the agency or a rewrite of the patent statutes, POPA believes that what is necessary is for the [PTO] to go back to the basics of its mission — examining patent applications and issuing valid patents," Stern said.

PTO Director Jon Dudas told the panel the agency is working to reduce a backlog of 600,000 pending patent applications. He said if the agency closed its doors today, it would take the current examining staff about two years to complete its work on those cases.

But Dudas said the agency has taken many steps to improve patent quality and efficiency. He said PTO will have hired about 940 new patent examiners by the end of FY05, an addition that represents a 25 percent increase in its examining staff. Dudas said the agency plans to hire 1,000 additional patent examiners annually from 2006 to 2011.

"One thing I know for sure is that the examiners at the [PTO] are the most efficient and effective in the entire world," Dudas told the panel.

Dudas also said PTO plans to launch a "completely new approach" to training new patent examiners in January. The agency "will teach new examiners in a collegial and collaborative environment, providing up to eight months of intensive coursework on examination and relevant legal issues," he said. "This represents a very significant increase in initial training."

Stern said PTO has "no problem" hiring examiners, but retaining those employees for long periods of time often proves difficult. "Approximately half leave within the first three years on job," Stern said. "More important are the mid-career employees who leave the agency. In fiscal 2005, approximately 40 percent of those leaving will be employees with between three and 15 years experience."

PTO has taken steps to improve employee retention, such as offering flexible work schedules, special pay raises and transit subsidies, he said. But Stern said those benefits "are not, by themselves, sufficient to overcome many employees' dissatisfaction with the production-oriented nature of patent examining."

Reprinted with permission from *National Journal*'s *Congress Daily,* Sept. 9, 2005. Copyright 2005 *National Journal's Congress Daily.* All rights reserved.

Examiners Need More Time

(continued from page 2)

USPTO Director Jon Dudas testified to the congressional subcommittee that a solution to the agency's problems is to "hire more, train better, retain better and telecommute." While the USPTO speaks of the volume of examiners it's hiring, the patent corps is like a sieve leaking employees almost as fast as they're hired. From fiscal year 2000 through 2004, the agency hired 2,309 patent examiners yet lost 1,527.

"If the USPTO truly desires to reduce attrition, it must effectively address the reasons that most examiners leave—job dissatisfaction and higher pay," testified Stern. The USPTO's workplace benefits like flextime and transit subsidies are overshadowed by the day-to-day stresses of working in a "legal sweatshop." Stern noted that examiners are "skilled professionals and deserve to be treated as such... examiners want to do a good job they can be proud of."

POPA's testimony at the hearing received favorable press coverage in *Technology Daily, Washington Internet Daily,* and *Congress Daily.* To view full hearing testimony by POPA and others, go to *www.popa.org.*

USPTO Follows Through on POPA Transit Subsidy Proposals

Future generations of USPTO employees will benefit because POPA, the agency and the other USPTO unions agreed to speed the delivery of transit subsidies to new employees, an idea POPA first proposed in July 2004 in a memo sent to Director Jon Dudas and underscored in last month's *POPA News.*

The agreement, signed Sept. 1, will enable new employees to receive the transit subsidy application at the new-employee orientation and to complete the application form and submit it that morning. These employees will receive their benefits as early as the afternoon of the orientation.

POPA recommended that the agency expedite the subsidy program in a July 26, 2004, memo to five senior USPTO officials with the subject, "Transit subsidies for new employees." The union pointed out the tardy transit subsidy application delivery to new hires and their sometimes months-long delay in receiving the subsidy. The memo closed with a request that the issues be addressed in "an expedient and in an employee friendly manner."

In an August 2005 *POPA News* article entitled "Constructive Ideas from TC 2100 'Town Hall' Meeting," POPA cited one employee's suggestion that the USPTO provide transit subsidy information and applications with the first letter notifying employees that they're hired. This pre-relocation information could affect new employees' housing decisions—if they plan to take public transit, they may choose housing in an area convenient to public transit. The earlier they receive the USPTO transit subsidy information, the better.

The Sept. 1 transit subsidy program improvements affect all USPTO employees, not just those in the POPA bargaining unit. For a copy of the agreement, go to *www.popa.org*, click on "Useful Info" and then "Public Transportation Subsidy."

Leaders of the three USPTO unions joined agency officials at the signing of the Public Transportation Subsidy Program agreement in September. [Front row seated, L to R] Howard Friedman, President, NTEU Chapter 245; Michelle Picard, Director, USPTO Office of Finance; Ronald Stern, President, POPA; Albertha Jackson, President, NTEU Chapter 243. [Back row, L to R] Dave Dalke, Acting Chief, USPTO Labor Relations Division; Steve Martin, USPTO Labor Relations Specialist; Debbie Cohen, Vice President, NTEU Chapter 245; Tanya Baylor, Secretary, NTEU Chapter 243; Howard Locker, Secretary, POPA; Peggy Focarino, USPTO Deputy Commissioner for Patent Operations; Howard Goldberg, USPTO Acting Chief Financial Officer; Vickers Meadows, USPTO Chief Administrative Officer; Kathy Duda, Delegate, POPA. Not shown: Tom Hellmer, Director, USPTO Financial Accounting Division; Laurie Taylor, Coordinator, USPTO Public Transit Subsidy Program.

NAPA: USPTO Culture Not Healthy

(continued from page 1)

The reality is that the people who have trouble making their production are the ones burning the midnight oil and working all the time. Contrary to the USPTO's assertions to NAPA, the agency acknowledged privately to POPA that it had only investigated 30 employees for time violations—not an astronomic number to hold responsible for slackening production. The agency's March 2005 contract proposals to POPA would fix this "liberalization of workday flexibilities" by clamping down "to impose additional workplace structure," according to the report.

NAPA didn't buy the USPTO's excuse for its through-the-roof docket of disciplinary actions. Added flexibilities are not "the root cause of the increase in employee relations cases as much as a symptom," said the report. "Added workforce flexibility should not necessarily translate into workforce problems."

The USPTO's "lost resources—dollars and people and organizational energy—are going to unproductive ends and contributing to decreased efficiency and increased pendency," NAPA determined.

While NAPA believes the USPTO (re)certification programs are "consistent with sound management practices," it recognized that "these reviews may result in reduced productivity" and recommended lengthening the 3-year time between certifications. It also recommended for the USPTO:

- Analysis of mandatory exit surveys to understand recruiting pitfalls;
- Additional recruiting resources and information to hiring officials;
- A mentor program requiring all new hires to receive a mentor outside of their supervisory chain.

Such a mentor can indeed "give them career advancement tips, work process advice … and listen to their concerns and give them feedback," as NAPA said. But such a mentor would have to be a senior examiner who must be given additional time for these new duties for this program to succeed.

The 298-page NAPA report included wide-ranging recommendations to the USPTO and Congress, most notably:

Collaborative Culture. Develop strategies for "a more positive, collaborative organizational culture." NAPA suggested investing in focus groups, consultant fees and materials or videos to spur cultural change. However, investing immediately in more examination time per case is money better spent on USPTO culture and quality improvement.

Retaining Employees. Use more of the USPTO's current, performance-based-organization hiring flexibilities; determine why examiners are likely to leave within their first three years on the job and what can be done to retain them; develop competitive recruitment programs.

Improve Awards. Create a group award to spur innovation and overcome the "production loner" concept; establish a fund to provide seed money for USPTO elements seeking to pilot work process simplification, pendency reduction or quality improvement programs.

Government Corporation. Create the U.S. Patent and Trademark Corporation as a wholly owned government corporation under the Secretary of Commerce with authority to borrow, set fees within congressional limits, issue its own regulations and use all of its fees without fiscal year limitation.

Outsource Search. Review the potential to outsource the search function to a federally funded research and development center working only for the USPTO. The Defense Department and the National Aeronautics and Space Administration (NASA) currently use such centers, according to NAPA.

Limit Continuations. Work with stakeholders to identify the appropriate number of continuations to allow. NAPA noted the validity of continuations, but "some applicants use them to 'game the system.'"

Quality. Monitor results of current quality initiatives to ensure that deserving inventors are not being delayed or denied. NAPA observed that the examination error rate has remained stable, but studies and congressional testimony report "perceptions that patent quality has declined."

Post-grant Review. Limit the grounds for challenges to patentability and not enforceability; limit discovery to cross examination on relevant matters; limit estoppel to those issues raised in the proceeding; permit the patent owner a single narrowing of any claims, adding dependent claims only with good cause. If enacted, compile data on the costs and benefits of post-grant review and inter partes reexamination, including the impact on patent quality.

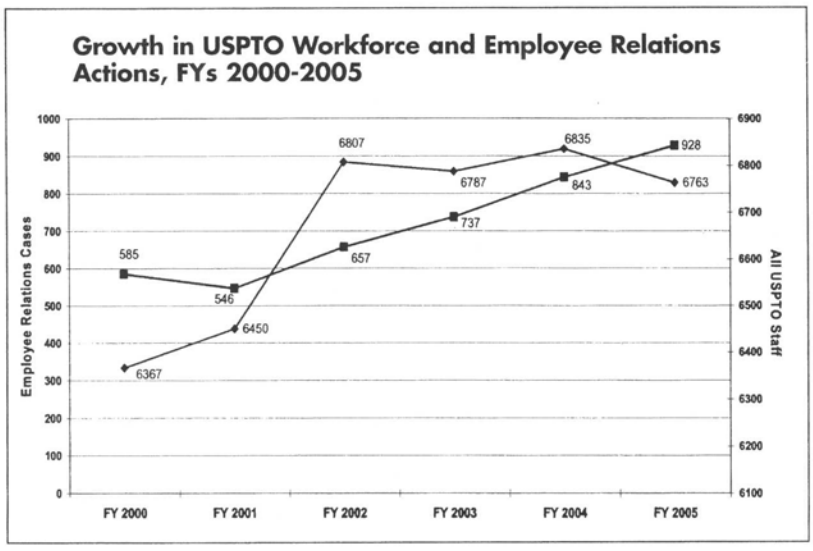

From *U.S. Patent and Trademark Office: Transforming to Meet the Challenges of the 21st Century*, NAPA, August 2005.

Federal Appeals Court Defines Claim Construction

Claims in patent applications must be considered independently of each other and claim term definitions must depend more heavily on information intrinsic to the application, according to a recent appeals court ruling.

In supporting claim differentiation, the full, en banc ruling from the Court of Appeals for the Federal Circuit (CAFC) in July in Phillips v. AWH Corp. also noted, "differences among claims can also be useful in understanding the meaning of particular claim terms."

In addition, the court clarified how claim terms should be defined by overturning a 2002 CAFC ruling for "too much reliance on extrinsic sources such as dictionaries, treatises, and encyclopedias and too little on intrinsic sources, in particular the specification and prosecution history."

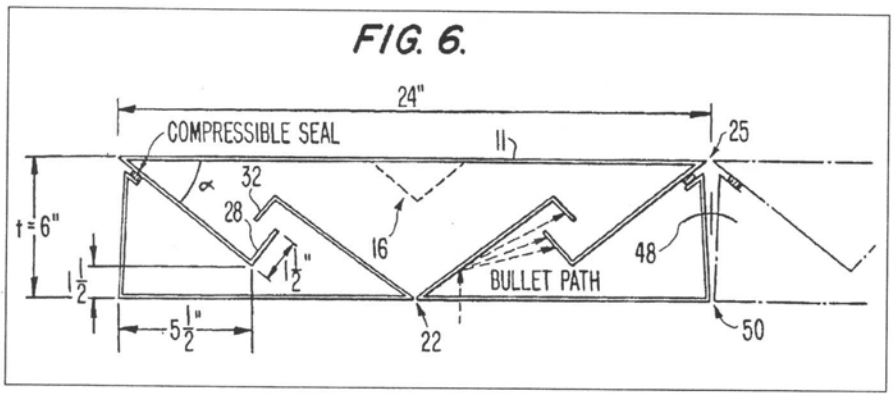

Figure 6 from Phillips' Patent No. 4,677,798 shows a cross section through an assembled wall module indicating the three triangular pieces comprising the wall. Elements 26, 27, and 31 are the disputed "baffles" in the claimed modular wall.

The case, last reported in the Nov. 2004 *POPA News*, is considered very important by the patent community—the court received 32 amicus briefs, an extraordinarily high number. The case revolved around the parties' definition of the noun "baffle" used in the patent's claims. In the patent held by Phillips, the device's wall is comprised of "internal steel baffles extending inwardly from the steel walls." While the baffle in the specification is only shown extending at an acute angle from the exterior wall, the specification does not place any limit on the baffle's angular orientation.

Claim Differentiation Upheld

The alleged patent infringer, AWH Corp., created a wall panel with a reinforcing support at a 90-degree angle to the exterior surface. In defending against the infringement charge, AWH Corp. maintained that Phillips' invention was limited to having the baffles oriented at an acute angle because that was all that was taught by the patent, and thus the angular orientation of the baffle became incorporated into the meaning of the term "baffle" as used by the patentee. However, Phillips' broadest claim did not specify that the baffle had to be placed at an acute angle to the exterior surface. Other claims did, however, specify an acute angle.

"Because claim terms are normally used consistently throughout the patent, the usage of a term in one claim can often illuminate the meaning of the same term in other claims," wrote the court. Regarding differences among claims, the court added, "the presence of a dependent claim that adds a particular limitation gives rise to a presumption that the limitation in question is not present in the independent claim."

The court ruling warned practitioners to "avoid the danger of reading limitations from the specification into the claim."

"We recognize that the distinction between using the specification to interpret the meaning of a claim and importing limitations from the specification into the claim can be a difficult one to apply in practice," the court continued. "Although the specification often describes very specific embodiments of the invention, we have repeatedly warned against confining the claims to those embodiments."

The court recognized that USPTO examiners are required to give claims their broadest reasonable construction in light of the specification.

"The rules of the PTO," stated the CAFC decision, "require that application claims must 'conform to the invention as set forth in the remainder of the specification and the terms and phrases used in the claims must find clear support or antecedent basis in the description so that the meaning of the terms in the claims may be ascertainable by reference to the description.'

"It is therefore entirely appropriate for a court, when conducting claim construction, to rely heavily on the written description for guidance as to the meaning of the claims," the court decided.

Contextual Definitions

"The context in which a term is used in the asserted claim can be highly instructive," the court noted. "To take a simple example, the claim in this case refers to 'steel baffles,' which strongly implies that the term 'baffles' does not inherently mean objects made of steel. This court's cases provide numerous similar examples in which the use of a term within the claim provides a firm basis for construing the term."

The court, however, limited the use of dictionary definitions in claims, saying claims "must be read in view of the specification," which is "the single best guide to the meaning of a disputed term." While dictionary definitions may be relevant and worthwhile when a term is unclear in the application, dictionaries and other extrinsic sources take a back seat to intrinsic meanings in the context of the specification.

When a specification reveals a patentee's special

(*continued on page 6*)

Defend Against Daily Disaster

Give Through the CFC

When disaster strikes, here or abroad, we Americans respond, giving generously of our hard-earned wages. But even before the first check is written, the emergency assistance non-profit organizations take action—placing volunteers and professionals on the ground to help with rescue, medical aid, shelter, food and water.

How can they do that? How can these charities afford to be ready to scramble their people into place with the necessities for thousands of threatened individuals?

Because people like you and me every year contribute when there isn't a disaster. We give just because we know our support is needed to keep these vital organizations poised for the next peril. We give because we know it's the right thing to do.

Your steady support for our nation's non-profit organizations through the Combined Federal Campaign (CFC) ensures that help is ready, wherever and whenever needed. And your donations can help in any way you choose: medical research, environmental defense and cleanup, fighting poverty, and many other valuable ways. You can preserve the fabric of our charitable infrastructure, maintaining these safety nets to catch anyone who falls.

The recent hurricanes and floods brought disaster on a grand scale. But little disasters happen daily, to those we know and many whom we don't. Give now through the CFC, so we all can have somewhere to turn when disaster's at our door.

Ronald J. Stern
Ronald J. Stern
POPA President

Court Defines Claim Construction

(continued from page 5)

definition of a claim term that differs from its usual meaning, "the inventor's lexicography governs," stated the court. If the specification shows the inventor's intentional disclaimer or disavowal of claim scope, the inventor's intention in the specification stands.

The court also highlighted the importance of the prosecution history in determining claim terms, but said it's less clear and useful because it "represents an ongoing negotiation between the PTO and the applicant, rather than the final product of that negotiation."

In discussing the lesser significance of extrinsic evidence, the court wrote, "[E]ach party will naturally choose the pieces of extrinsic evidence most favorable to its cause, leaving the court with the considerable task of filtering the useful extrinsic evidence from the fluff."

Help Your Fellow Employees

You can help your fellow USPTO employees in a way that no one else can: You can give them some of your leave.

These employees have used all of their available leave dealing with personal emergencies, usually long-term medical problems for themselves or immediate family members. Anyone interested in donating leave to any of these agency-approved leave recipients should go on the USPTO Intranet to the Office of Human Resources page, click on Employees' Guide, then on the Leave Transfer Program. Click on Leave Recipients to read the individuals' stories.

- Denise Brown Anderson
- Elizabeth Bolden
- Natahnya Campbell
- Nicole Hall
- Albertha Jackson
- Michael Lee
- Hwei-Siu c. Payer
- Marie Reddick
- James (Shane) Bergin and Bethany Griles (husband and wife)

JOIN POPA

Patent Office Professional Association

Letters from readers are welcome. Address to:
The Editor, Patent Office Professional Association,
P.O. Box 2745, Arlington, VA 22202 • (571) 272-7161

Officers

Ronald J. Stern, *President,* (571) 272-2322

Lawrence J. Oresky
Vice President/Director of Grievances, (571) 272-6930

Howard Locker, *Secretary/*
Director of Adverse Action Challenges, (571) 272-0980

Pamela R. Schwartz, *Assistant Secretary/*
Director of Unfair Labor Practices, (571) 272-1528

Randy Myers, *Treasurer,* (571) 272-7526

Visit us on the Web at http://www.popa.org

© 2005 Patent Office Professional Association